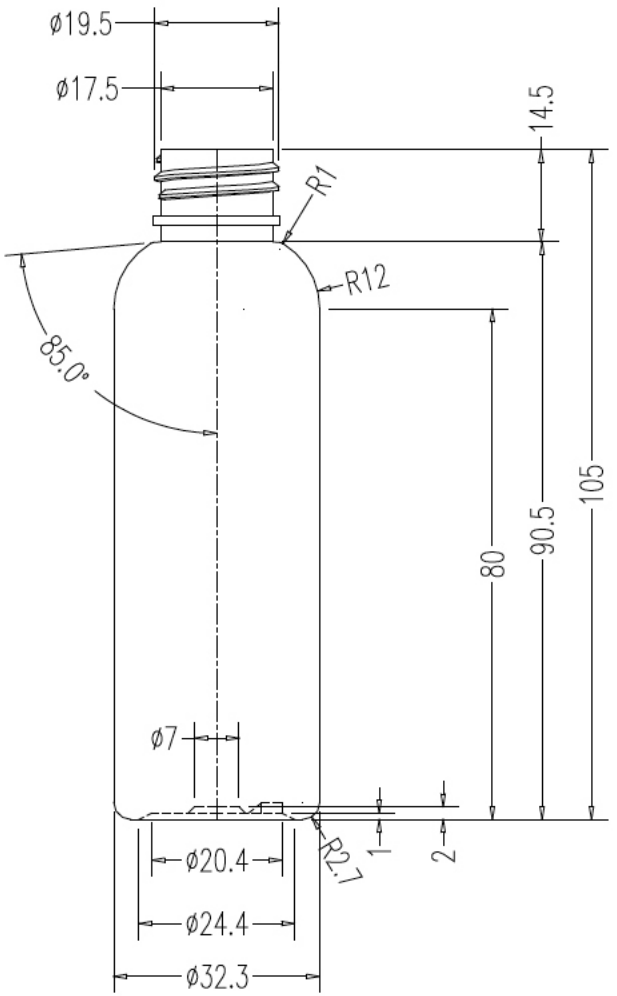
ø19.5
ø17.5
14.5
R1
R12
85.0°
80
90.5
105
ø7
1
2
R2.7
ø20.4
ø24.4
ø32.3

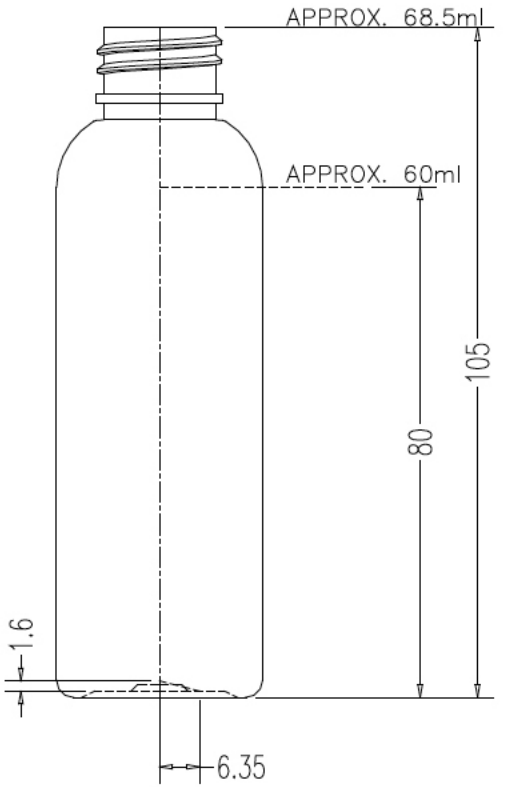
APPROX. 68.5ml
APPROX. 60ml
105
80
1.6
6.35

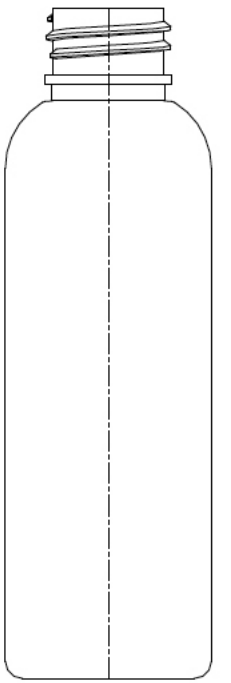

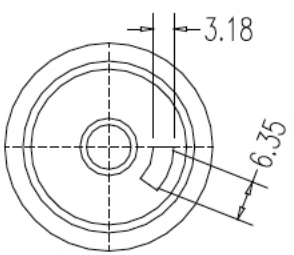
3.18
6.35